Part's Manual

Snowblower with rotary drum by cylinder

B84TRC
B96TRC

SA88TRC Model

ANNEE 88-89

SNOWBLOWER PARTS

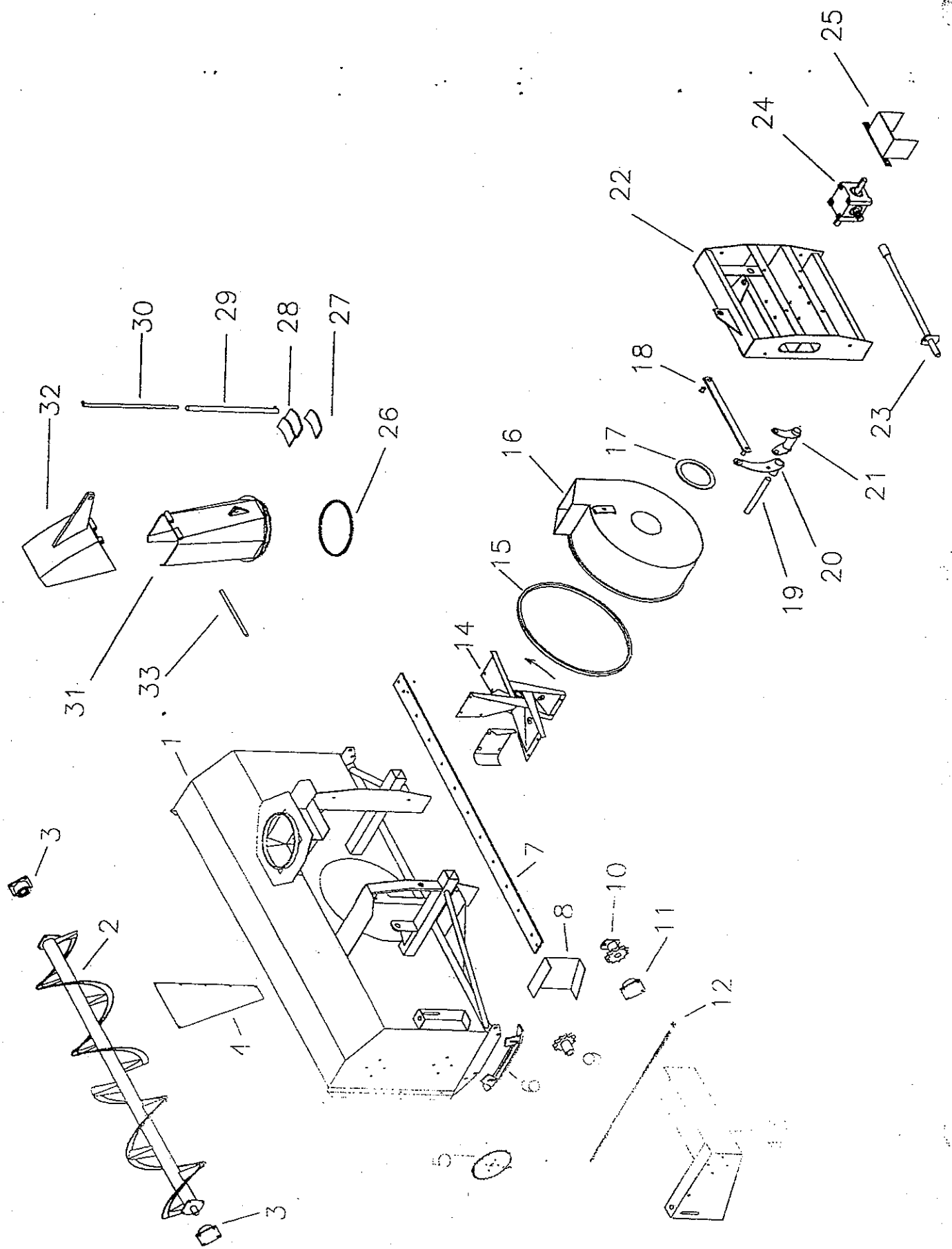

SNOWBLOWER PARTS

REF	DESCRIPTION	QTY	PART #
1	Housing	1	661605
2	Auger	1	661612
3	Bearing	2	654082
4	Restriction plate	1	659268
5	Sprocket 1 1/4"	1	~~655958~~ 654007
6	Skid shoe	2	661607
7	Cutting hedge	1	661606
8	Chain guard	1	661616
9	Hidler sprocket	1	~~654756~~ 654010
10	Shear plate and sprocket	1	~~655960~~ 654024
11	Bearing	1	662030
12	Chain	1	~~662056~~ 659061
13	Driving support	1	661611
14	Fan	1	661819
15	Ring "UHMW" 3/8" 1/2"	1	661989
16	Rotary drum	1	661619
17	Ring "UHMW" 3/8" x 1"	1	661988
18	Rotation plate	1	659026
19	Rotation pin	1	659041
20	Lever arm	1	659028
21	Rotation rod	1	659020
22	Rear casing	1	661620
23	Driving shaft	1	656864
24	Gear box	1	~~656835~~ 656549
25	Driveline shield	1	659162
26	Ring "UHMW" 1/4"	1	661987
27	Spacer	3	661643
28	Raitaining plate	3	654077
29	Adjusting rod	1	654076
30	Adjusting rod	1	654074
31	Chute base	1	662073
32	Adjustable deflector	1	654072
33	Hinge pin	1	654075

HYDRAULIC CHUTE ROTATION BY MOTOR

REF	DESCRIPTION	QTY	PARTS #
1	Support plate	1	659136
2	Hex. bolt 1/2" NC x 1 1/4"	2	O/L
3	Lock washer 1/2"	2	O/L
4	Hex. nut 1/2" NC	2	O/L
5	Support bracket	1	659144
6	Hex. bolt 1/2 NC x 1 1/4"	1	O/L
7	Lock washer 1/2"	1	O/L
8	Hex. nut 1/2"	1	O/L
9	Hex. bolt 3/4" NC x 4 1/2"	1	O/L
10	Lock washer 3/4"	1	O/L
11	Hex. nut 3/4"	1	O/L
12	Hydraulic motor w/woodruf key	1	654108
13	Hex. bolt 3/8" NC x 3/4"	4	O/L
14	Lock washer 3/8"	4	O/L
15	Sprocket 1" hole dia.	1	654706
16	Key woodruf 1/4" x 1" dia.	1	659191
17	Allen set screw 5/16" NC x 5/16"	2	O/L
18	Idler sprocket	2	65410
19	Flat washer 11/16" hole dia.	14	O/L
20	Flat washer 11/16" hole dia.	6	O/L
21	Chain # 60	1	659143
	Offset link	1	658239
	Connecting link	1	658238
22	Cover guard	1	659135
23	Hex.bolt 5/8" NC x 4"	2	O/L
24	Flat washer 11/16" hole dia.	4	O/L
25	Lock washer 5/8"	2	O/L
26	Hex. nut 5/8" NC	2	O/L
27	Hex. bolt 1/2" NC x 3 1/4"	2	O/L
28	Lock washer 1/2"	2	O/L
29	Hex nut 1/2"	2	O/L
30	Stopper	1	657225
31	Hex. bolt 3/8" NC x 2"	2	O/L
32	Nut 3/8" NC, nylon lock	2	O/L

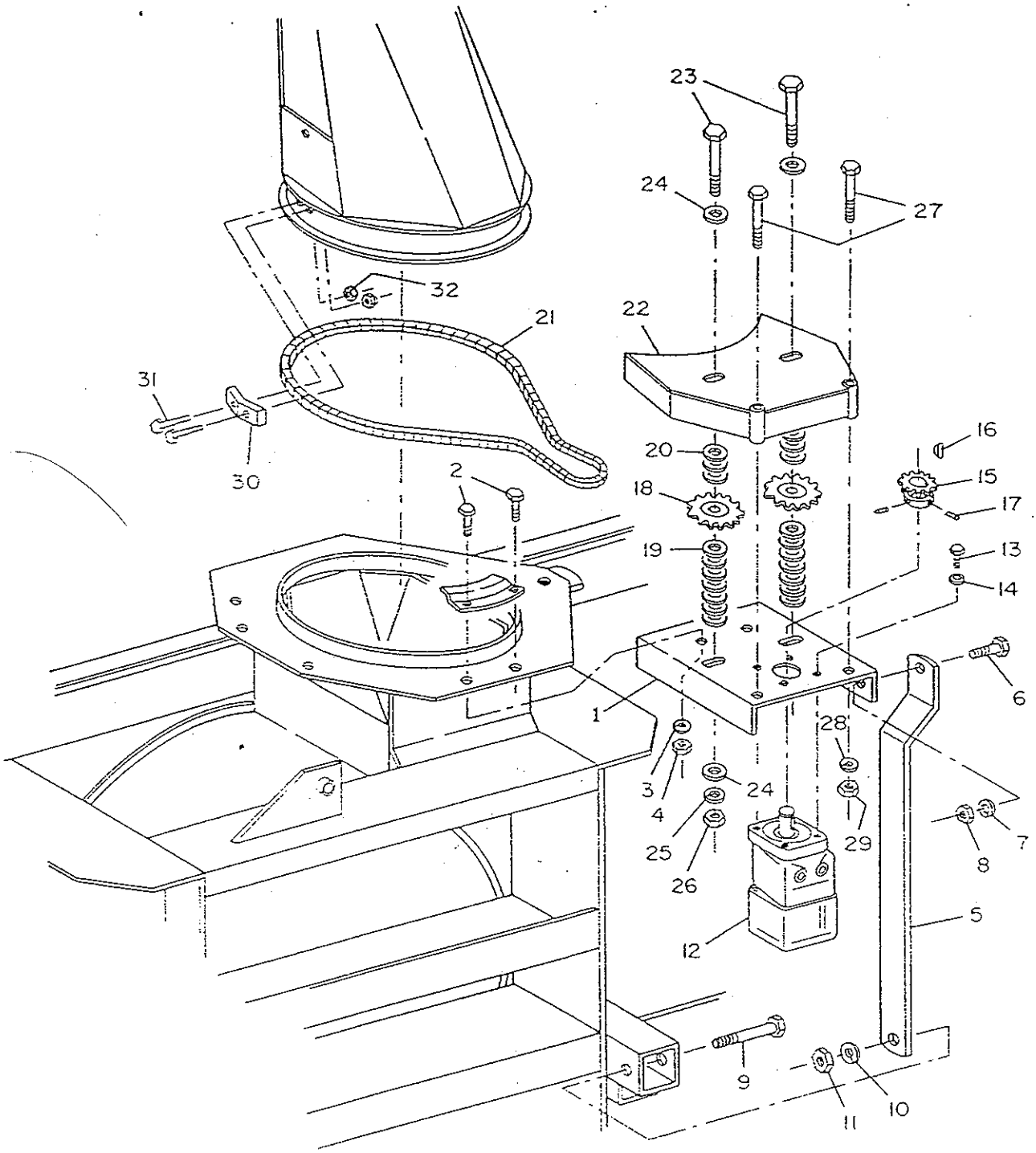
23
24
27
32
21
22
31
30
16
20
15
2
18
17
19
13
14
6
1
28
3
24
4
29
7
25
8
26
5
12
9
11
10

HYDRAULIC CHUTE ROTATION BY CYLINDER

REF	DESCRIPTION	QTY	PARTS #
1	Rotation arm	1	659024
2	Pulley support	1	659029
3	Hex. bolt 5/8" NC x 2"	1	O/L
4	Lock washer 5/8"	1	O/L
5	Hex. nut 5/8" NC	1	O/L
6	Hex. bolt 1/2" NC x 1 1/4"	1	O/L
7	Hex. bolt 1/2" NC x 1 1/2"	1	O/L
8	Lock washer 1/2"	2	O/L
9	Hex. nut 1/2" NC	2	O/L
10	Pulley 2 1/2" dia. x 5/8" hole dia.	4	654191
11	Pullley guard	2	654193
12	Pulley guard with hole	2	659045
13	Screw 1/4" NC x 1" ,square head	2	O/L
14	Cable 3/16" dia. x 182" lg.	1	657243
15	Cotter pin 5/32" dia. x 1"	2	O/L
16	Cotter pin 3/16" dia. x 1 3/4"	1	O/L
OPTIONAL COMPONENT			
17	Cylinder 2 1/2" x 8" or 3" x 8"	1	O/L

HYDRAULIC CHUTE ROTATION BY CYLINDER

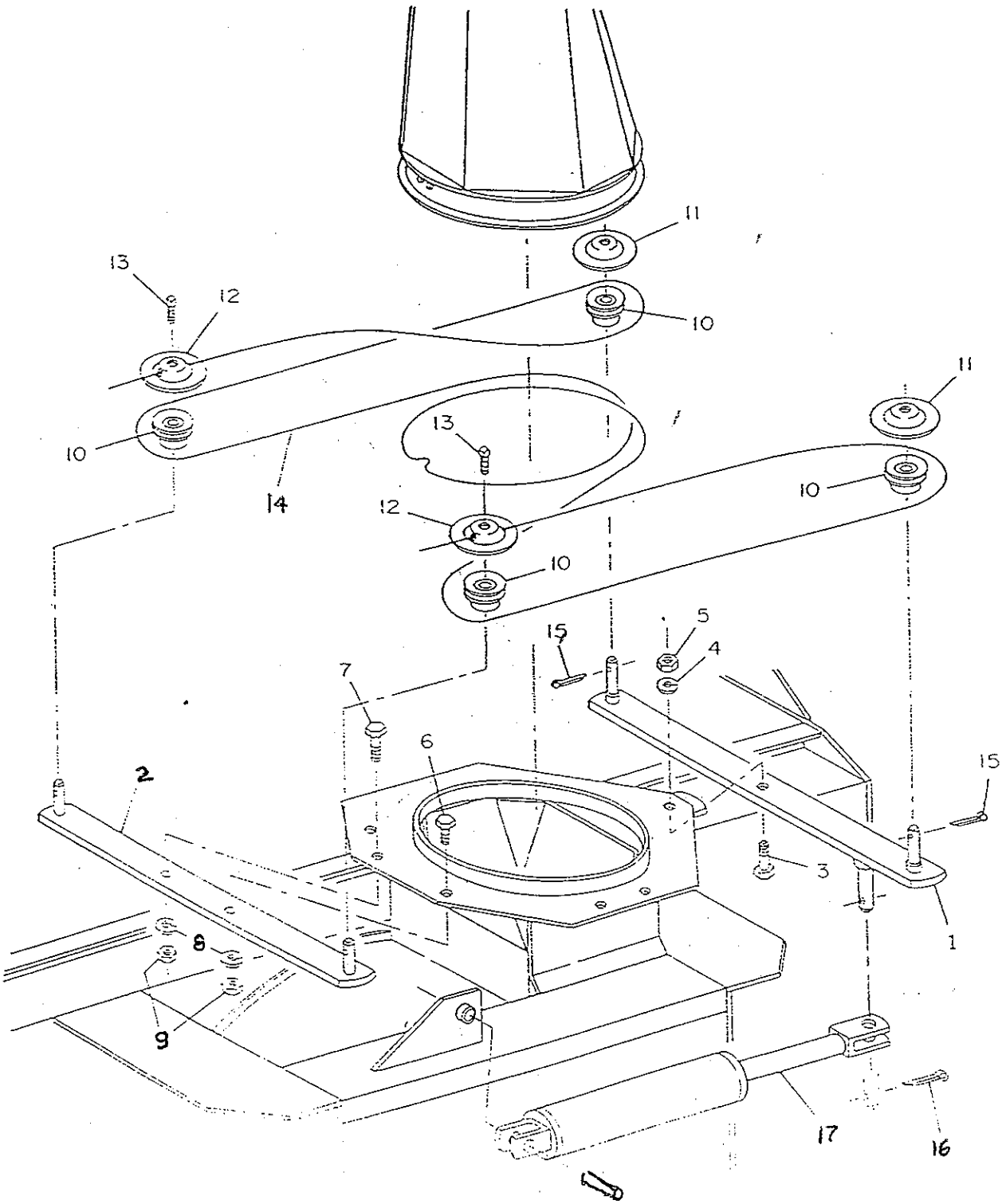

CHUTE

REF	DESCRIPTION	QTY	PART #
1	Chute and deflector	1	657311
2	Knobs 5/16" NC	2	657309
3	Hand guard	1	657308
4	Flat washer 11/32" dia. hole	2	658467
5	Retraining plate	4	657333
6	Hex bolts 1/4" NC x 1/2"	6	O/L
7	Lock washer 1/4"	8	O/L
8	Nut 1/4" NC	8	O/L
9	Hex bolts 1/4" NC x 3/4"	4	O/L
10	Nylon ring	1	657338
11	Carriage bolt 5/16" NC x 1 1/2"	2	O/L
12	Plastic bushing 1 11/16"	1	657336
13	Rotation worm	1	657733
14	Plastic bushing 1 5/16"	1	657335
15	Worm suppport	1	657493

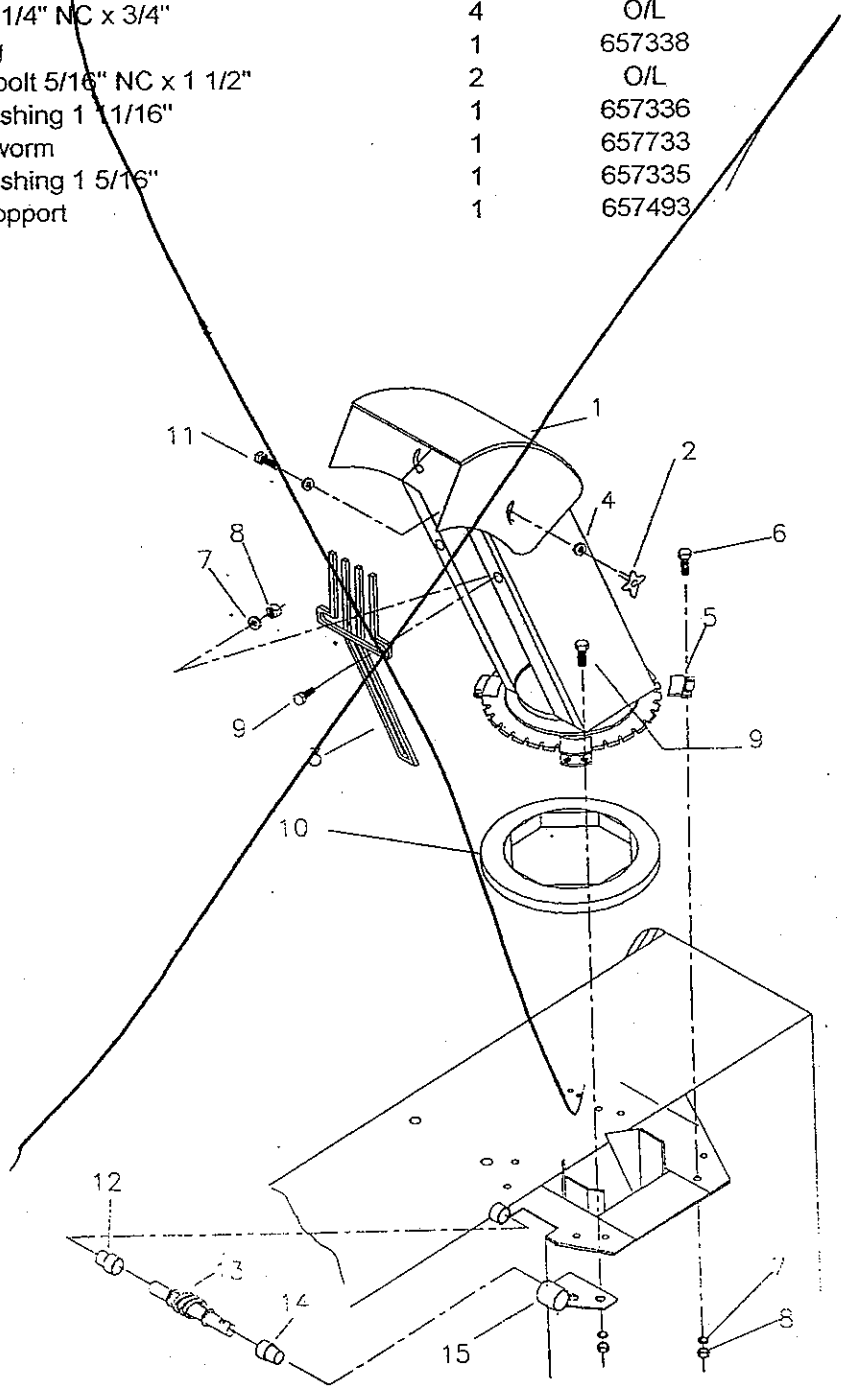

INDUSTRIAL THREE PART CHUTE

REF	DESCRIPTION	QTY	PART NO.
1	Deflector	1	654900
2	Center chute	1	654899
3	Base chute	1	656556
4	Hinge rod	2	65475
5	Chute rod	1	654896
6	Pin (1/8" dia. x 1", cotter)	6	O/L
7	Pin (1/8" dia. x 1 1/2", cotter)	2	O/L
8	Deflector adjustment strap	2	654895
9	Washer (1/2" hole dia., flat)	2	O/L

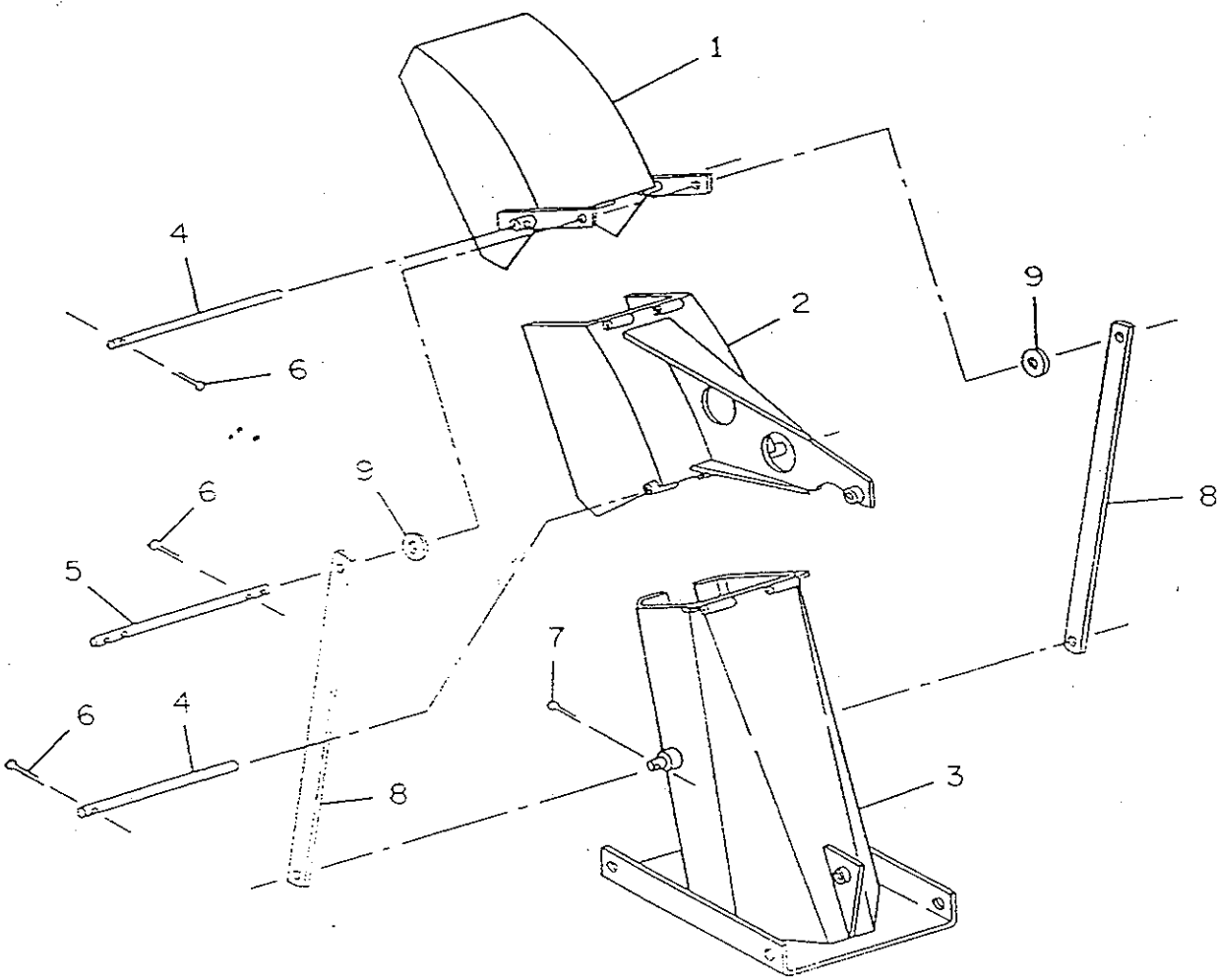

TRUCK LOADING CHUTE

REF	DESCRIPTION	QTY	PART NO.
1	Deflector	1	654900
2	Center chute	1	654899
3	Base chute	1	656266
4	Hinge rod	2	65475
5	Chute rod	1	654896
6	Pin (1/8" dia. x 1", cotter)	6	O/L
7	Pin (1/8" dia. x 1 1/2", cotter)	2	O/L
8	Deflector adjustment strap	2	654895
9	Washer (1/2" hole dia., flat)	2	O/L

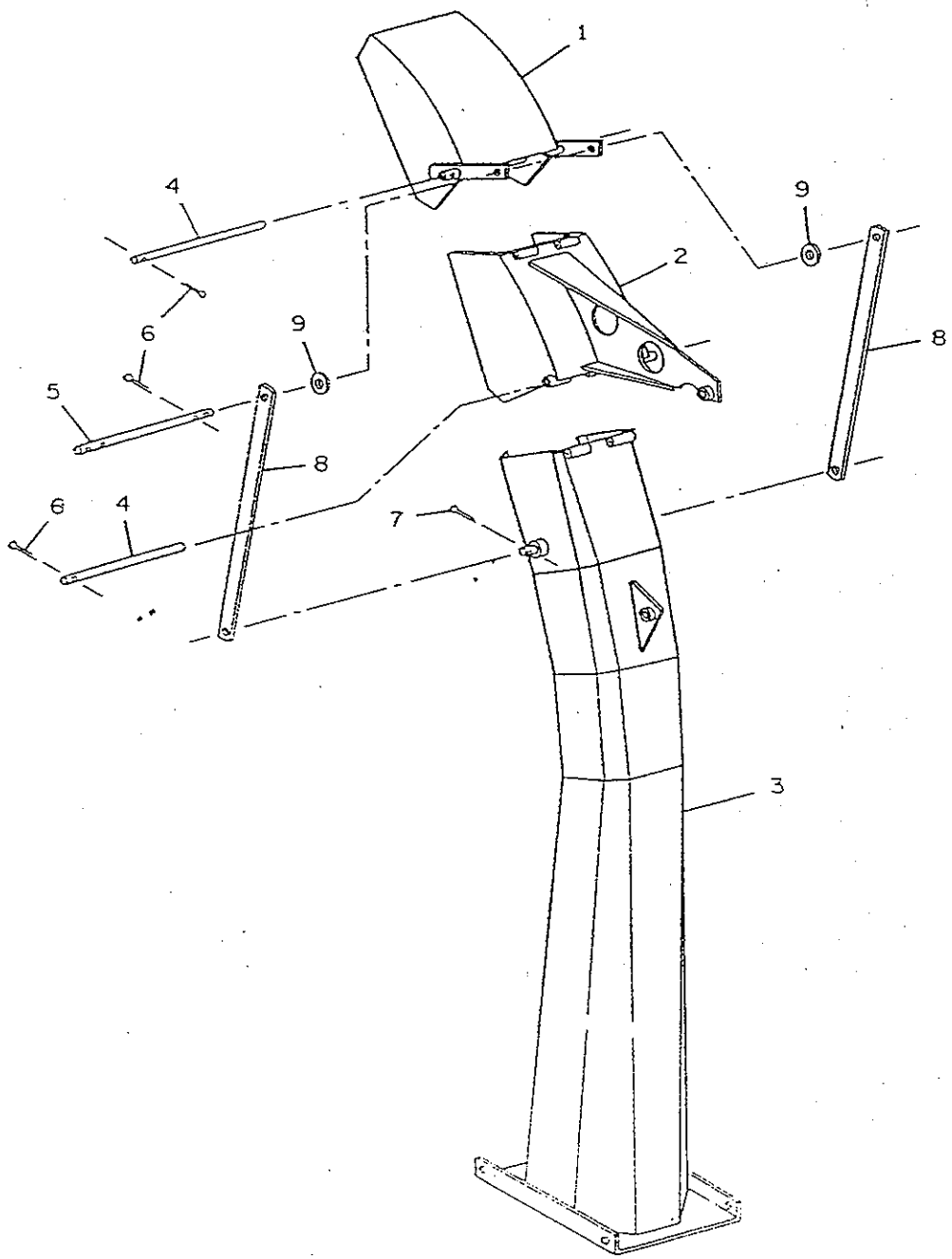

GEAR BOX(656835)

REF	DESCRIPTION	QTY	PARTS #
1	Casing	1	656640
2	Dust excluder 35 x 72 x 12	1	656650
3	External circlip	1	656652
4	Shim 35,3 x 43	2	656649
5	Bearing	1	656653
6	Spacer	1	656648
7	Internal circlip 72	1	656654
8	Bearing	1	656647
9	Shaft	1	656651
10	Gear	1	656645
11	External circlip 40	1	656646
12	Bearing	2	656641
13	Shim 65,3 x 79,7	1	656644
14	Internal circlip 80	2	656642
15	Dust excluder 40 x 80 x 12	2	656643
16	Shaft	1	657192
17	Gear	1	656657
18	Shim 40,3 x 51,5	1	656655
19	Gasket	1	656658
20	Cover	1	656660
21	Hex. bolts M10 x 14	4	656659
22	Oil plug 3/8" NPT	2	655259
23	Oil filter plug	1	656662

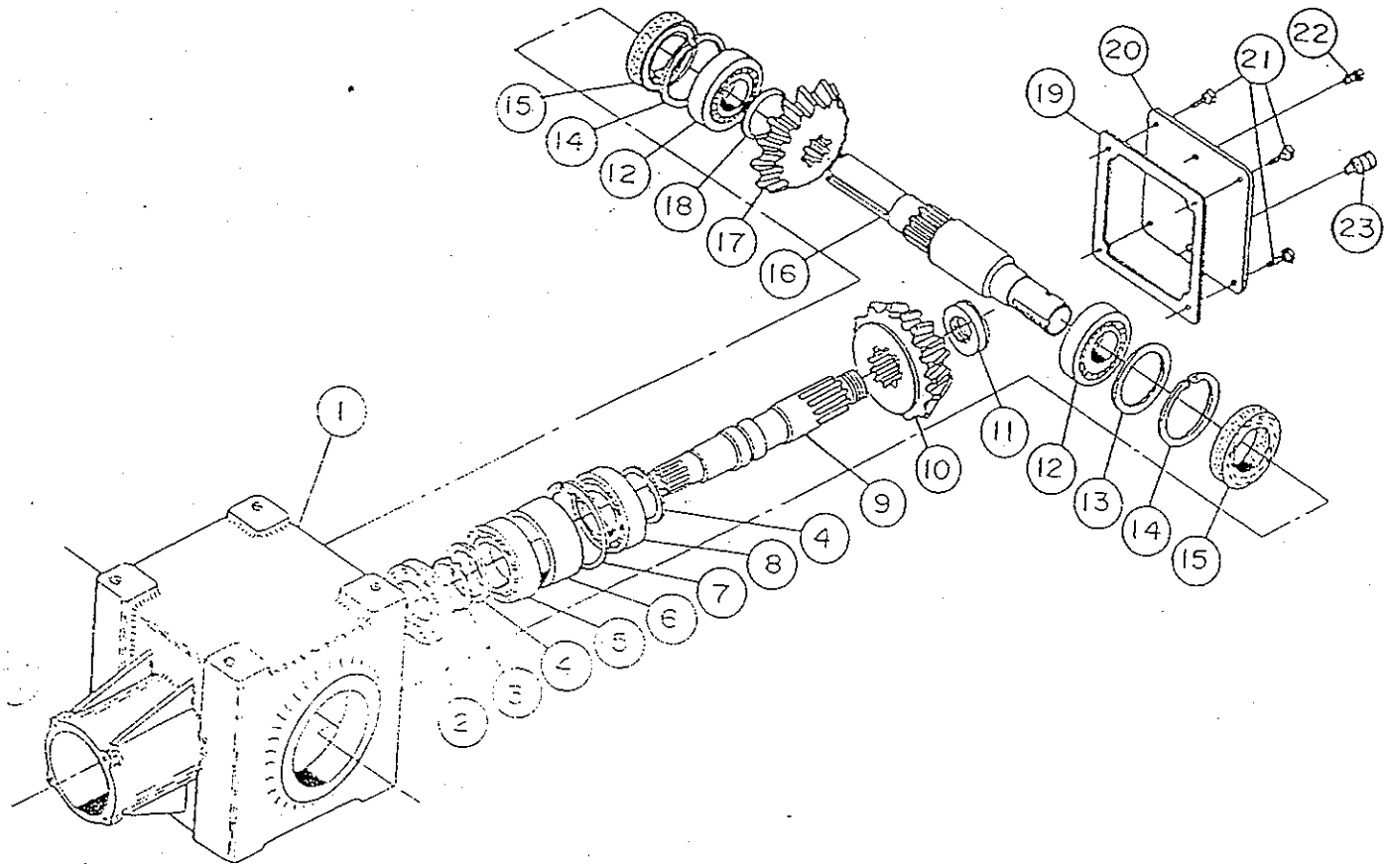

INDUSTRIAL ORBIT MOTOR CHUTE ROTATION

REF	DESCRIPTION	QTY	PART NO.
1	Chute base	1	655992
2	Rod	2	656317
3	Pin (1/4" dia. x 1 1/2", roll)	4	O/L
4	Motor plate	1	655989
5	Retaining plate	1	655990
6	Retaining plate	1	656318
7	Retaining plate	1	656319
8	Grease fitting (1/4" NF)	2	654106
9	Bolt (1/2" NC x 2", hex)	8	O/L
10	Nut (1/2" NC, hex)	8	O/L
11	Washer (1/2", lock)	8	O/L
12	Chain #60 x 69 links	1	656326
	Double offset link	1	658239
	Double connecting link	1	658238
	Half link	1	65425
13	Stopper	1	657225
14	Bolt (3/8" NC x 2", hex)	2	O/L
15	Nut (3/8" NC, nylon lock)	2	O/L
16	Motor Mac 24001 with Woodruff key	1	654108
17	Key "woodruff" (1/4" x 1" dia.)	1	659191
18	Bolt (3/8" NC x 3/4", hex)	4	O/L
19	Washer (3/8", lock)	4	O/L
20	Sprocket (60B10)	1	654706
21	Set screw (5/16" NC x 5/16", allen)	2	O/L
22	Cover	1	655991
23	Sprocket (idler)	2	65410
24	Washer (11/16" hole dia., flat)	26	O/L
25	Bolt (5/8" NC x 4", hex)	2	O/L
26	Washer (5/8", lock)	2	O/L
27	Nut (5/8" NC, hex)	2	O/L
28	Bolt (3/4" NC x 1 1/2", hex)	1	O/L
29	Washer (3/4", lock)	1	O/L
30	Nut (3/4" NC, hex)	1	O/L

INDUSTRIAL ORBIT MOTOR CHUTE ROTATION

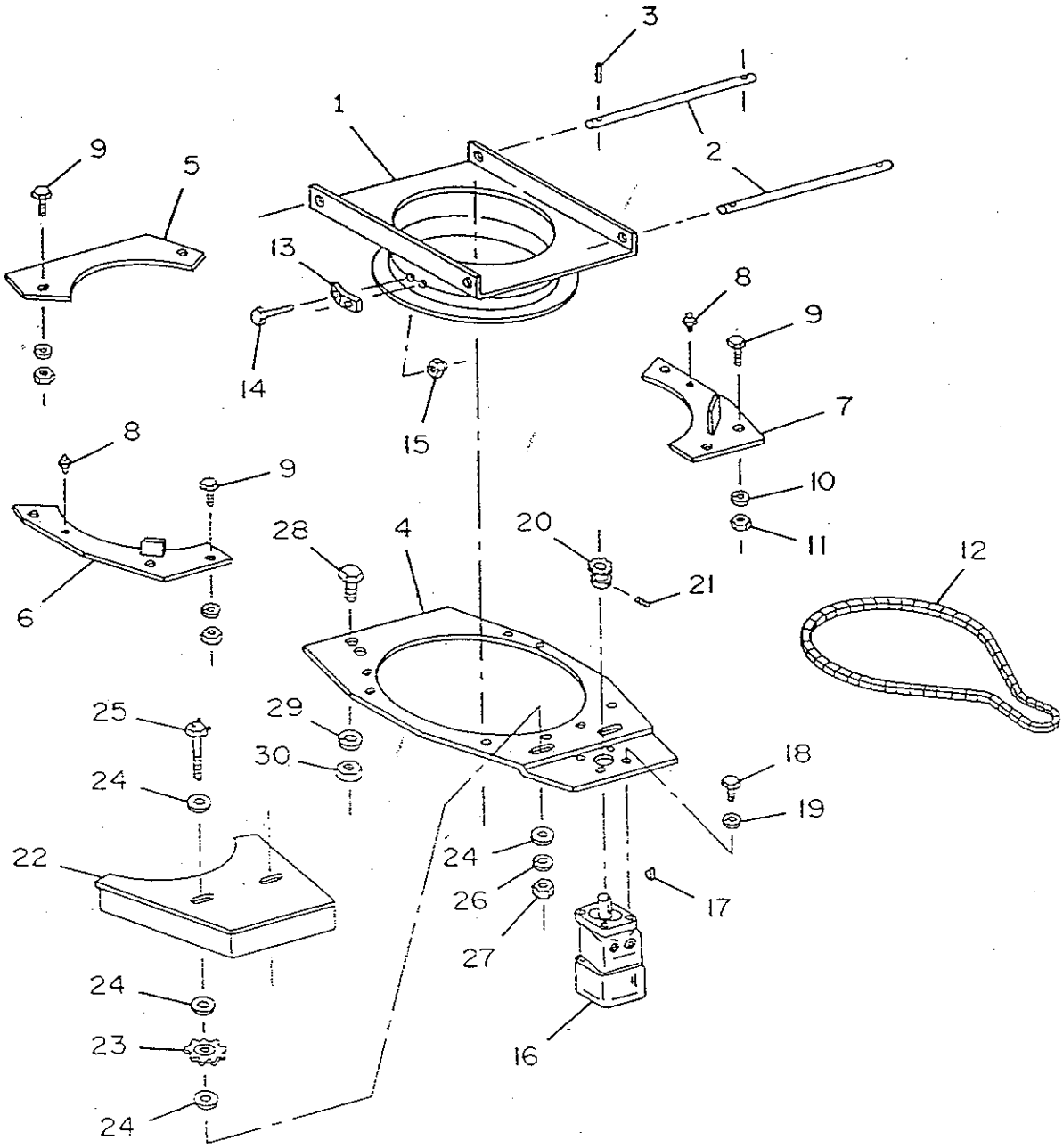

SECOND AUGER CONVERSION KIT

MODEL			84"	96"
REF	DESCRIPTION	QTY	PART NO.	PART NO.
1	Auger assembly	1	655777	655997
2	Bearing	2	65482	65482
3	Bolt (1/2" NC x 1 1/2", hex)	8	O/L	O/L
4	Washer (1/2", lock)	8	O/L	O/L
5	Nut (1/2" NC, hex)	8	O/L	O/L
6	Sprocket (#60A32)	2	654167	654167
7	Bolt (3/8" NC x 1 1/4", hex)	10	O/L	O/L
8	Washer (3/8", lock)	10	O/L	O/L
9	Nut (3/8" NC, hex)	10	O/L	O/L
10	Auger drive chain no 60 - 81 links	1	654788	654788
	Connecting link no. 60	1	654839	654839
	Half link no. 60	1	65425	65425
11	Adjuster	1	655782	655782
12	Idler sprocket CA60	1	65410	65410
13	Bolt (5/8" NCx 2 1/2", hex)	1	O/L	O/L
14	Washer (11/16" hole dia., flat)	2	O/L	O/L
15	Washer (5/8", lock)	1	O/L	O/L
16	Nut (5/8" NC, hex)	1	O/L	O/L
17	Chain guard	1	655787	656279

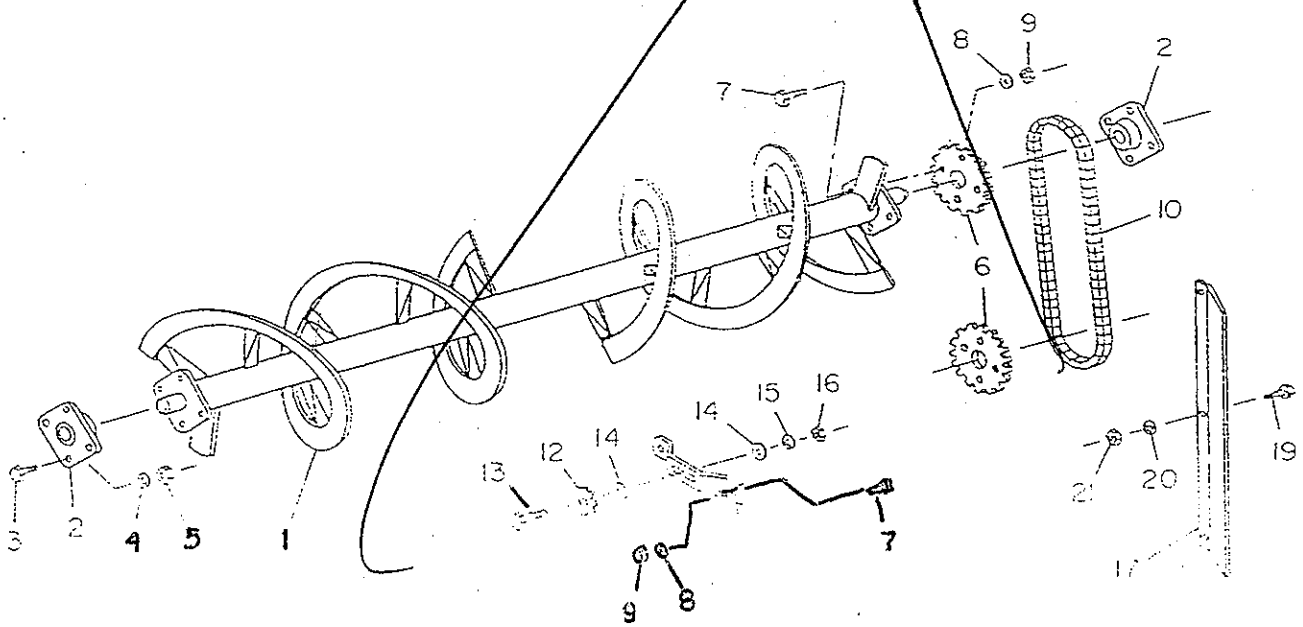

PTO shaft (656864)

REF	DESCRIPTION	QTY	PARTS #
1	Quick disconnect yoke assembly	1	657193
2	Safety pin	2	657195
3	Quick disconnect	1	657194
4	Quick disconnect yoke	1	654196
5	Ball	23	657197
6	Grease fitting	1	657198
7	Shear bolt	1	657199
8	Universal joint kit	2	657200
9	Snap ring	8	657201
10	Grease fitting	2	657202
11	Yoke for female shaft	1	657203
12	Pin	1	657204
13	Female shaft	1	657205
14	Male shaft	1	657206
15	Pin	1	657207
16	Yoke for male shaft	1	657208
17	Yoke of snoblower	1	657209
18	Quick disconnect and female shaft assembly	1	657210
19	Yoke and male shaft assembly	1	657211
20	Shield assembly	1	657221
21	Outer shield and femal shaft assembly	1	657222
22	Inner shield and male shaft assembly	1	657223
23	Safety pin	1	657217

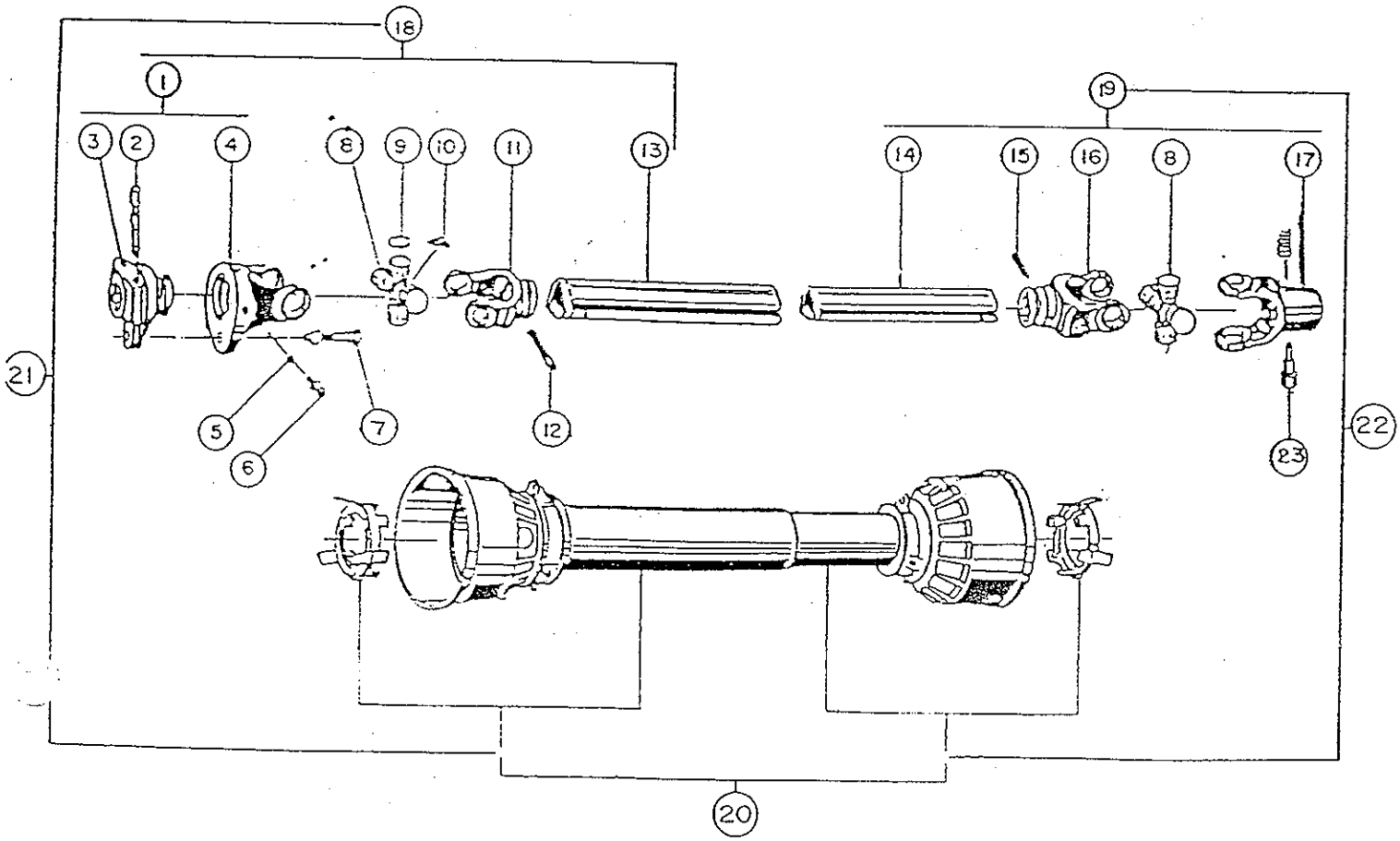

THREE POINTS HITCH ASSEMBLY

REF	DESCRIPTION	QTY	PART NO.
1	Lower hitch tube - left hand	1	655780
2	Lower hitch tube - right hand	1	655789
3	Three point hitch	2	655779
4	Upper hitch	1	659086
5	Pin Cat. 2	2	655813
6	Pin (1/4" dia. x 1 3/4", roll)	2	O/L
7	Pin (7/16" dia., linch)	2	658755
8	Chain (R-1024 x 12" lg.)	1	654200
9	"S"-hook (7/32" dia. x 2 1/2" lg.)	2	O/L
10	Bolt (3/4" NC x 4", hex)	3	O/L
11	Bolt (3/4" NC x 2", hex)	3	O/L
12	Washer (3/4", lock)	6	O/L
13	Nut (3/4" NC, hex)	6	O/L

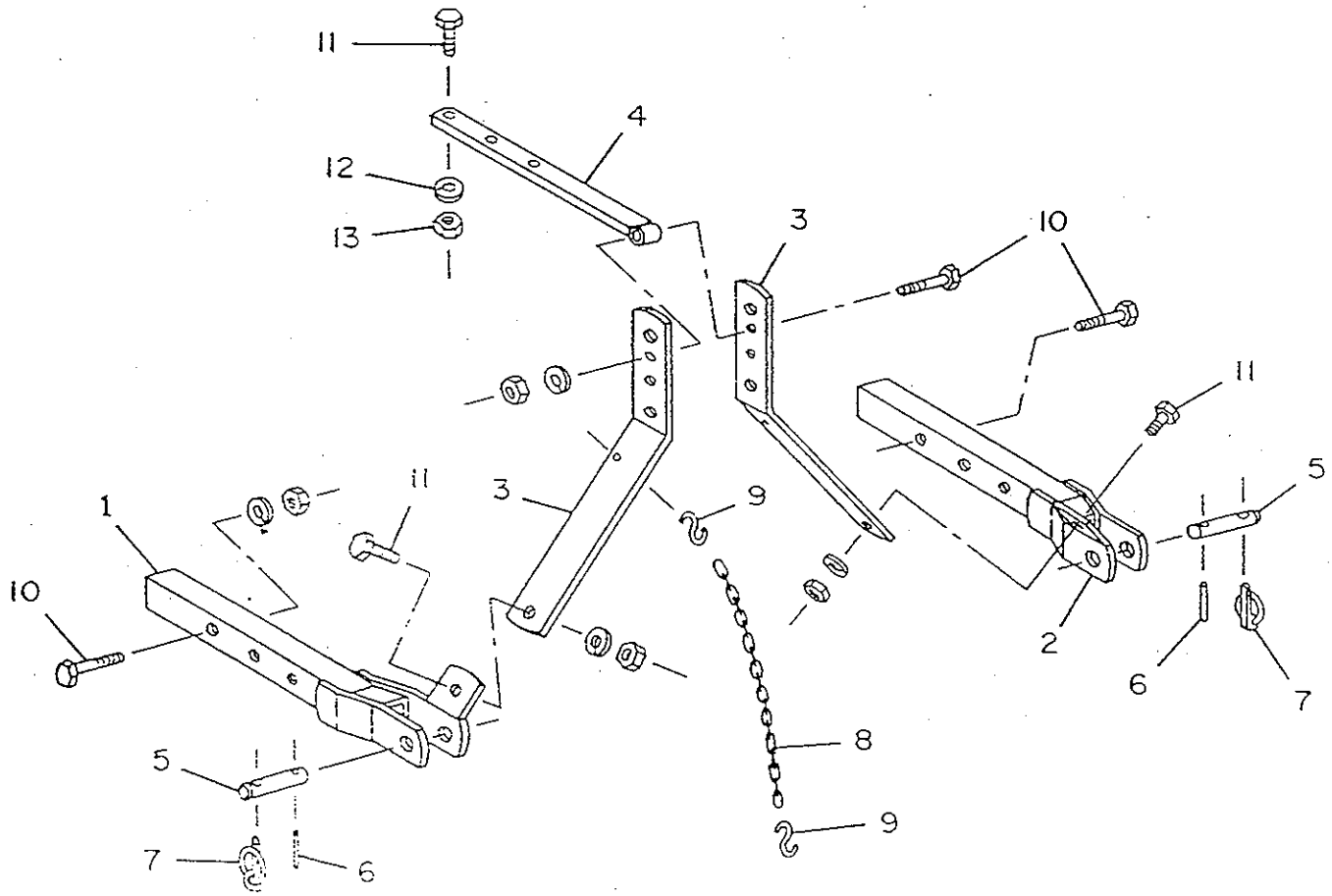

THE FOLLOWING ARE ILLUSTRATIONS OF THE SAFETY DECALS FOUNDS ON THE SNOWBLOWER. IF THEY BECOME DAMAGED OR LOST, REPLACE THEN IMMEDIATELY. THEY CAN BE OBTAINED FROM YOUR DEALERS.

REF	DESCRIPTION	QTY	PART NO.
1	SAFETY DECAL, Danger (# 88) ..... Located on Driveline guard.	1	656781
2	SAFETY DECAL, Danger (# 86) ..... Located on deflector chute, both side.	2	656779
3	SAFETY DECAL, Danger (# 87) ..... Located on top of blower housing, both ends.	2	656780
4	SAFETY DECAL, Warning (# 45) ..... Located on back of chute.	1	656060
5	DECAL, Important (# 21) ..... Located on right hand side of impeller housing.	1	655834
-	DECAL, "BER-VAC" (# 53) ..... Located on top of blower housing, left hand.	1	654638
-	DECAL, "C84TRC" (#174) ..... Located on top of blower housing, right hand.	1	658895
-	DECAL, "C96TRC" (#175) ..... Located on top of blower housing, right hand.	1	658896

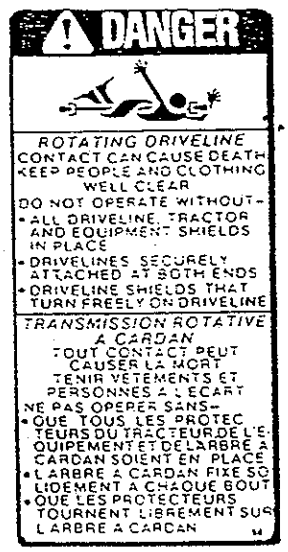

REF 1

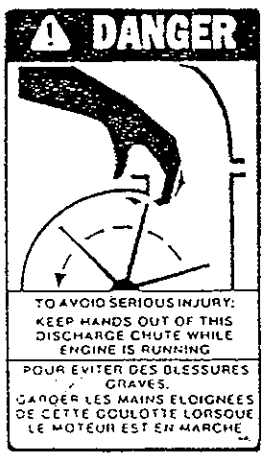

REF 2

REF 3

REF 4

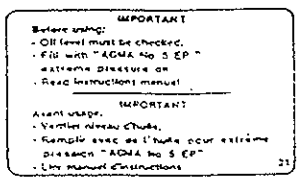

REF 5

TORQUE SPECIFICATION TABLE

GENERAL SPECIFICATION TABLE

USE THE FOLLOWING TORQUES WHEN SPECIAL TORQUES ARE NOT GIVEN

NOTE: These values apply to fasteners as received from supplier, dry, or when lubricated with normal engine oil. They do not apply if special graphited or moly disulphide greases or other extreme pressure lubricants are used. This applies to both UNF and UNC threads..

SEE Grade No.		2				5				8			
BOLT HEAD IDENTIFICATION MARKS AS PER GRADE NOTE: MANUFACTURING MARKS WILL VARY													
BOLT SIZES		Torque Pounds Feet		Torque Newton–Meters		Torque Pounds Feet		Torque Newton–Meters		Torque Pounds Feet		Torque Newton–Meters	
Inches	Millimeters	MIN.	MAX.	MIN.	MAX.	MIN.	MAX.	MIN.	MAX.	MIN.	MAX.	MIN.	MAX.
1/4	6.35	5	6	6.8	8.13	9	11	12.2	14.9	12	15	16.3	30.3
5/16	7.94	10	12	13.6	16.3	17	20.5	23.1	27.8	24	29	32.5	39.3
3/8	9.53	20	23	27.1	31.2	35	42	47.5	57.0	45	54	61.0	73.2
7/16	11.11	25	30	40.7	47.4	54	64	73.2	86.8	70	84	94.9	113.9
1/2	12.70	45	52	61.0	70.5	80	96	108.5	130.2	110	132	149.2	179.0
9/16	14.29	65	75	88.1	101.6	110	132	149.2	179.0	160	192	217.0	260.4
5/8	15.88	95	105	128.7	142.3	150	180	203.4	244.1	220	264	298.3	358.0
3/4	19.05	150	185	203.3	250.7	270	324	366.1	439.3	380	456	515.3	618.3
7/8	22.23	160	200	216.8	271.0	400	480	542.4	650.9	600	720	813.6	976.3
1	25.40	250	300	338.8	406.5	580	696	786.5	943.8	900	1080	1220.4	1464.5
1-1/8	25.58	–		–		800	880	1084.8	1193.3	1280	1440	1735.7	1952.6
1-1/4	31.75	–		–		1120	1240	1518.7	1681.4	1820	2000	2467.9	2712.0
1-3/8	34.93	–		–		1460	1680	1979.8	2278.1	2380	2720	3227.3	3688.3
1-1/2	38.10	–		–		1940	2200	2630.6	2983.2	3160	3560	4285.0	4827.4

METRIC BOLT TORQUE SPECIFICATIONS

Size of screw	Grade No.	Coarse thread Pitch (mm)	Coarse thread Pounds Feet	Coarse thread Newton–Meters	Fine thread Pitch (mm)	Fine thread Pounds Feet	Fine thread Newton–Meters
M6	4T (4)	1.0	3.6–5.8	4.9–7.9	–	–	–
	7T (7)		5.8–9.4	7.9–12.7		–	–
	8T (8) (11)		7.2–10	9.8–13.6		–	–
M8	4T	1.25	7.2–14	9.8–19	1.0	12–17	16.3–23
	7T		17–22	23–29.8		19–27	25.7–36.6
	8T		20–26	27.1–35.2		22–31	29.8–42
M10	4T	1.5	20–25	27.1–33.9	1.25	20–29	27.1–39.3
	7T		34–40	46.1–54.2		35–47	47.4–63.7
	8T		38–46	51.5–62.3		40–52	54.2–70.5
M12	4T	1.75	28–34	37.9–46.1	1.25	31–41	42–55.6
	7T		51–59	69.1–79.9		56–68	75.9–92.1
	8T		57–66	77.2–89.4		62–75	84–101.6
M14	4T	2.0	49–56	66.4–75.9	1.5	52–64	70.5–86.7
	7T		81–93	109.8–126		90–106	122–143.6
	8T		96–109	130.1–147.7		107–124	145–168
M16	4T	2.0	67–77	90.8–104.3	1.5	69–83	93.5–112.5
	7T		116–130	157.2–176.2		120–138	162.6–187
	8T		129–145	174.8–196.5		140–158	189.7–214.1
M18	4T	2.0	88–100	119.2–136	1.5	100–117	136–158.5
	7T		150–168	203.3–227.6		177–199	239.8–269.6
	8T		175–194	237.1–262.9		202–231	273.7–313
M20	4T	2.5	108–130	146.3–176.2	1.5	132–150	178.9–203.3
	7T		186–205	252–277.8		206–242	279.1–327.9
	8T		213–249	288.6–337.4		246–289	333.3–391.6

WARRANTY

RAD TECHONOLOGIES INC. warrants to the original buyer that the equipment is free from defects in material and workmanship. RAD TECHNOLOGIES INC.'s obligation, under this warranty, will be limited to the repair or to the replacement (F.O.B. factory) of any part or component which RAD TECHNOLOGIES INC. shall disclose to be defective within one year from date of original purchase (unless other wise specified).

In no event shall RAD TECHNOLOGIES INC. be liable for consequential or special damages, direct or indirect, arisen by the buyer/user.

This warranty replaces all other written or implied warranties and RAD TECHNOLOGIES INC. COMPANY neither assumes nor authorizes any other obligation nor responsibility in connection with the sale of the said product or components.

This warranty will not apply to the product (or components) which will have been the object of an accident, alteration, abuse or misuse. Any claim for parts or replacement of equipment must be taken up with the authorized dealer or with the office of the Company.

All components not manufactured by RAD TECHNOLOGIES INC. (such as motors, tires, etc.) are covered by the original manufacturer's warranty.

All claims must be taken up within 30 days from date of mechanical breakage. The Company reserves the right to require the said parts and this F.O.B. our factory or distributor.

2835, Chemin de L'Aéroport, Thetford Mines (Québec) G6G 5R7
Tél.: (418) 338-4499 Télécopieur: (418) 338-6090

Manufactured by:
RAD TECHNOLOGIES INC.
2835, Chemin de l'Aéroport
Thetford Mines, Qué., Canada G6G 5R7
Tel.: (418) 338-4499 - Fax: (418) 338-6090

Printed in Canada